computar

T3Z3510CS

VARI FOCAL 3X 3.5～10.5mm F1.0
for 1/3″format cameras
CS-Mount

Model No.		T3Z3510CS	**Effective Lens Aperture**	**Front**	φ18.5mm
Focal Length		3.5～ 10.5mm		**Rear**	φ 10.1mm
Max. Aperture Ratio		1 : 1.0	**Back Focal Length**	**Tele**	16.7mm
Max. Image Format		4.8 x 3.6mm (φ6mm)		**Wide**	8.3mm
Operation Range	**Iris**	F1.0 ～ C	**Flange Back Length**		12.5mm
	Focus	0.3m ～ Inf.	**Mount**		CS-Mount
	Zoom	3.5 ～ 10.5mm	**Filter Size**		M37.5 P=0.5mm
Control	**Iris**	Auto Iris	**Dimensions**		φ41.6 x 48.8mm
	Focus	Manual	**Weight**		64g
	Zoom	Manual			
Object Dimension at M.O.D.	**3.5 mm**	51.8 × 34.1cm			
	10.5mm	14.5 × 10.8cm			
Angle of View	**D**	1/3″ 108.4～34.2°			
	H	1/3″ 81.6～27.2°			
	V	1/3″ 59.2～20.4°			
Operating Temperature		-20°C ～ +50°C			

M.O.D. : Minimum Object Distance

Dimensions

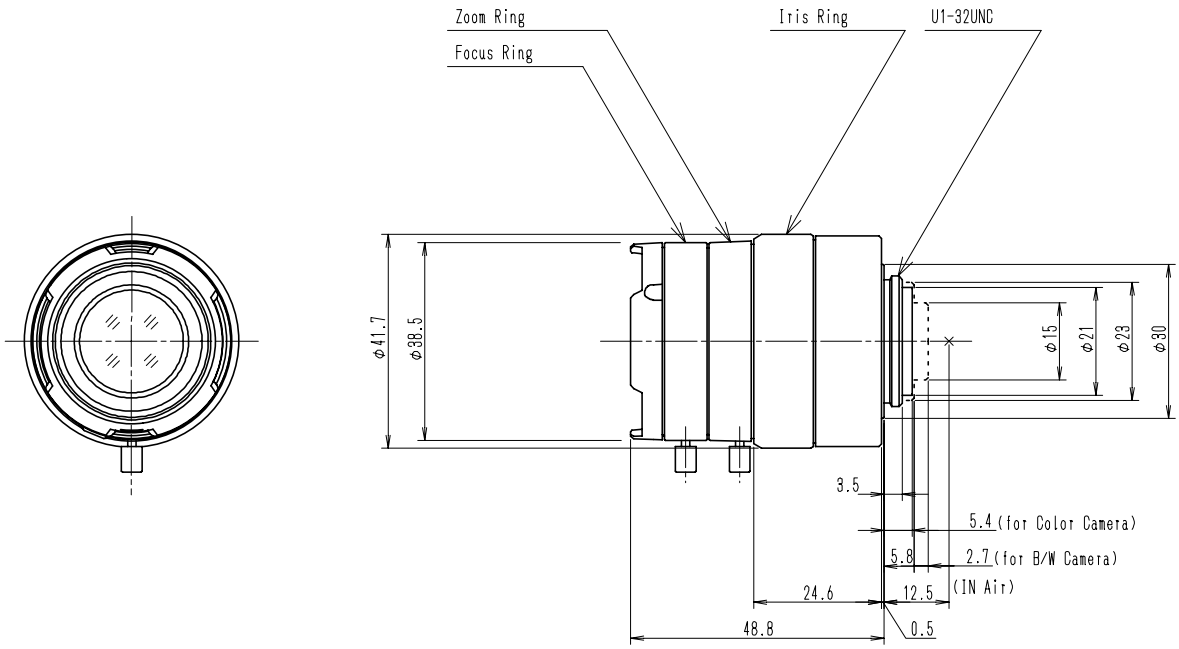

1/3
CS
Z
SP